MIRA®

BB-XJ

Instruction manual
English (EN)

Special cutting device for sleeve counterbore operations

For gas engine type: Jenbacher 6E/F

Table of contents

1 Declaration of conformity

MINELLI®

Minelli AG
Mattenstrasse 3
8330 Pfäffikon ZH
Schweiz / Switzerland
www.minelli.ch
sales@minelli.ch

Konformitätserklärung
Déclaration de conformité
Declaration of conformity
Dichiarazione di Conformità

Wir/*Nous*/We/Noi,

Minelli AG
Mattenstrasse 3
CH-8330 Pfäffikon ZH

erklären in alleiniger Verantwortung, dass das Produkt
déclarons de notre seule responsabilité que le produit
bearing sole responsibility, hereby declare that the product
dichiariamo sotto la nostra sola e completa responsabilità che il prodotto

Beschreibung des Produkts
BB-XJ
Déscription du produit
BB-XJ
Description of product
BB-XJ
Descrizione del Prodotto
BB-XJ
Typenreihe/ *Série type* / Type Series/ Serie Tipo
0418

auf das sich diese Erklärung bezieht, mit der/den folgenden Norm(en) oder normativen Dokumenten übereinstimmt:
auquel se rapporte la présente déclaration est conforme aux normes ou aux documents normatifs suivants:
referred to by this declaration is in confirmity with the following standards or normative documents:
riferente a questa dichiarazione è conforme alle seguenti regole e normative:

Bestimmungen der Richtlinie *Désignation de la directive* Provisions of the directive Denominazione della Direttiva	**Titel und/oder Nummer sowie Ausgabedatum der Norm(en)** *Titre et/ou numéro ainsi que date d`émission de la/des norme(s)* Title and/or number and date of issue of the standard(s) Titolo e/o numero e data di promulgazione della norma
2006/42/EG: Maschinenrichtlinie *2006/42/CE: Sûreté des machines* 2006/42/EC: Machinery safety 2006/42/EC: Sicurezza Macchine	SN EN 1037+A1: 2008-07 SN EN ISO 13849-1: 2016-05 SN EN 14120: 2016-03 DIN EN ISO 12100: 2011-03

Ort und Datum
Lieu et date
Place and date
Luogo e Data

Pfäffikon ZH, 19.07.2023

Reto Minelli (CEO/Geschäftsführer)
L`administrateur délégué
General Manager
Amministratore delegato

2 Overview

Top side

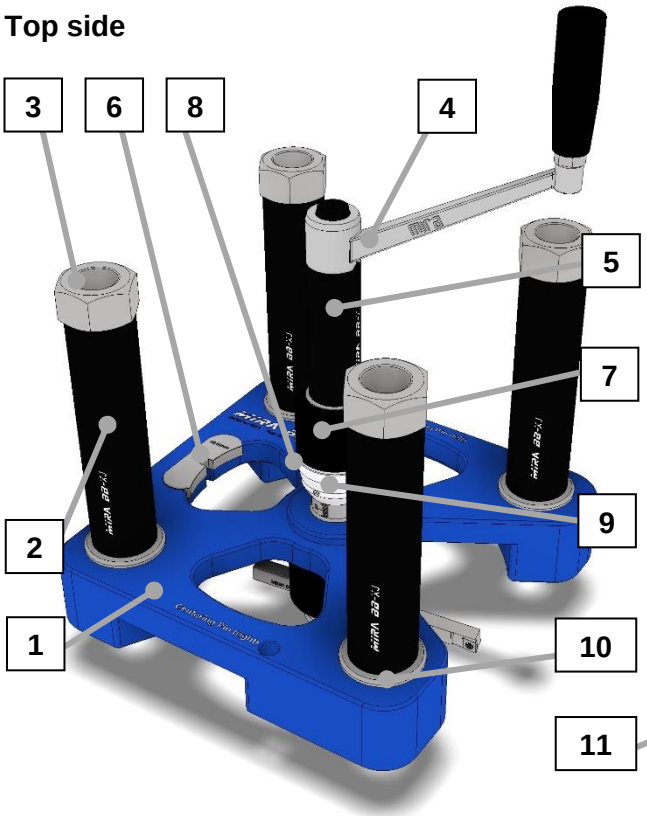

Bottom side

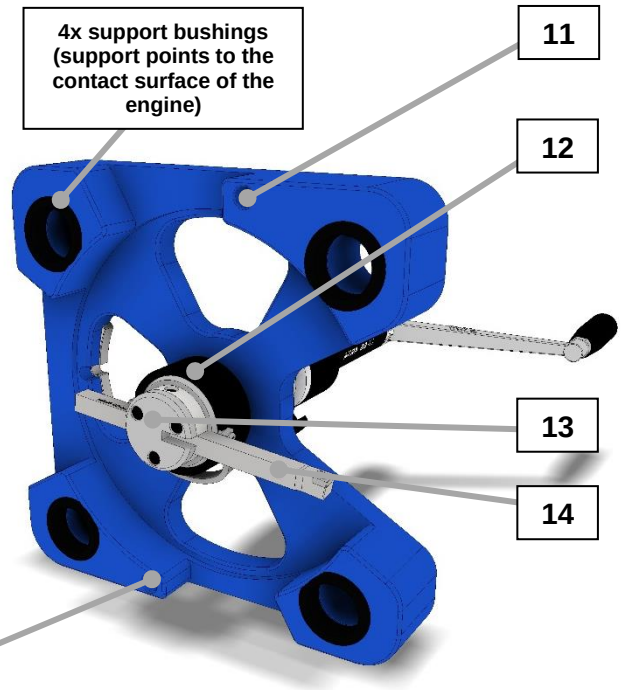

1. BB-XJ basic unit with main spindle
2. Locking sleeve
3. Screw nuts M30x2
4. Crank handle
5. Extension adapter
6. Gauge slide 60.00mm
7. Feed nut
8. Locking screw
9. Vernier display
10. Washer
11. Locating bores Ø12 for locating pins
12. Gear sleeve
13. Turning tool mount
14. Turning tool with cutting insert

3 BB-XJ packaging

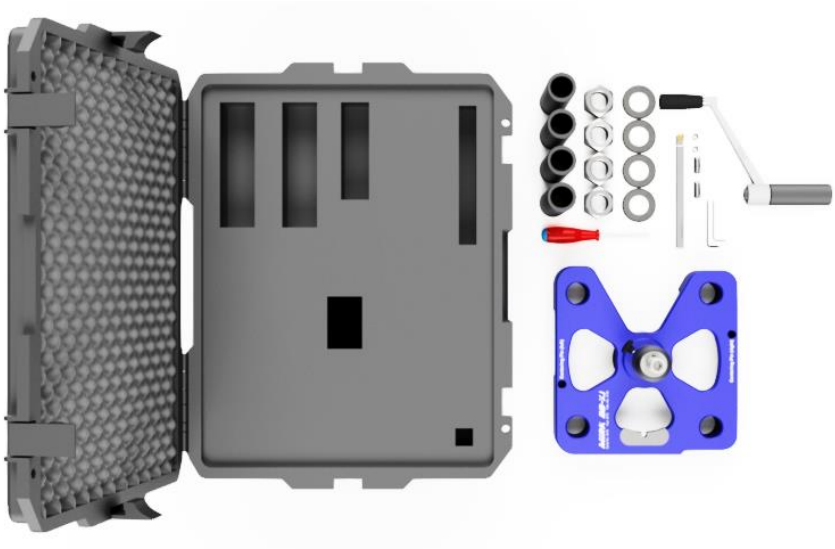

- 1x Peli Air Case with foam inlay
- 1x BB-XJ unit
- 1x turning tool 5°
- 1x crank handle with extension
- 4x locking sleeve
- 4x washer
- 2x Ø12 locating pins
  (only as an emergency spare part)
- 4x screw nut M30x2
- 1x allen key 3.0mm
- 1x allen key 2.5mm
- 1x torx wrench T15
- 2x cutting inserts (cast) 80°
  (CCGT 09T304FN-ACB)
- 1x Instruction manual in EN

4 Dimensions and weight

4.1 Transportation case

Dimensions in mm:

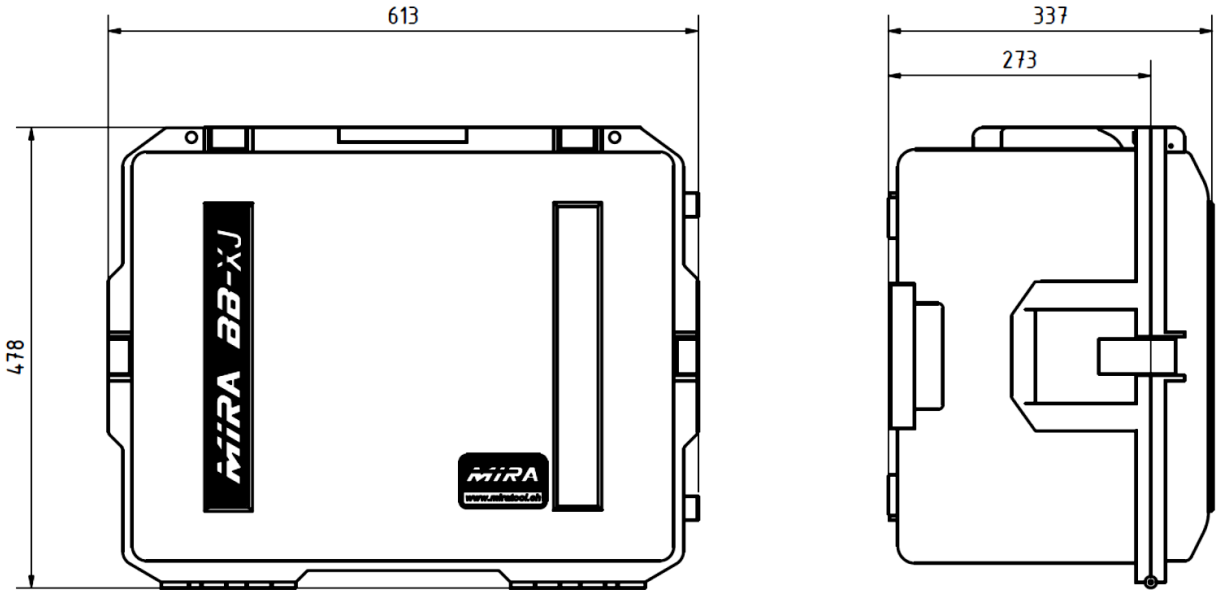

Complete weight BB-XJ Package: **22,0kg** (without cardboard box)

4.2 BB-XJ unit

Dimensions in mm:

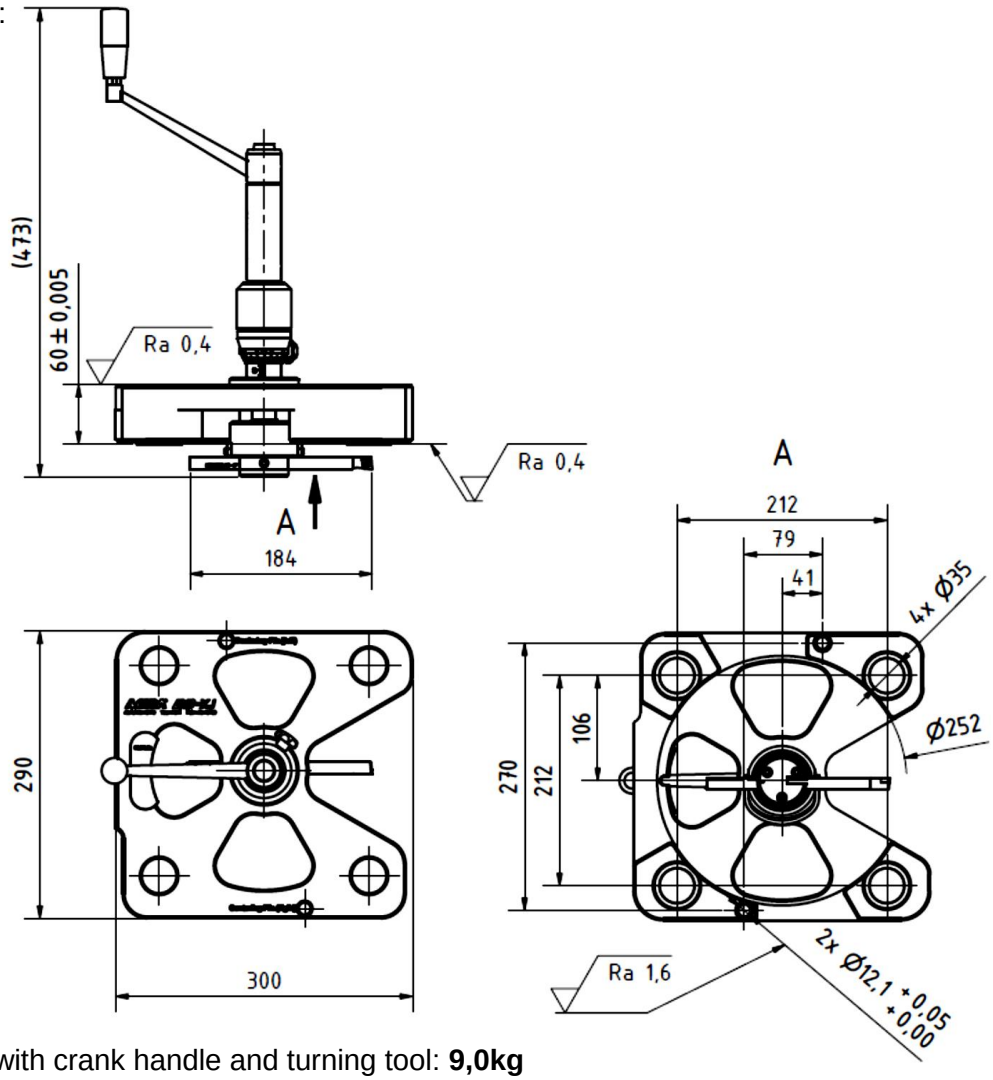

Weight of the unit with crank handle and turning tool: **9,0kg**

4.3 Dimensional form for gas engines type 6E/F

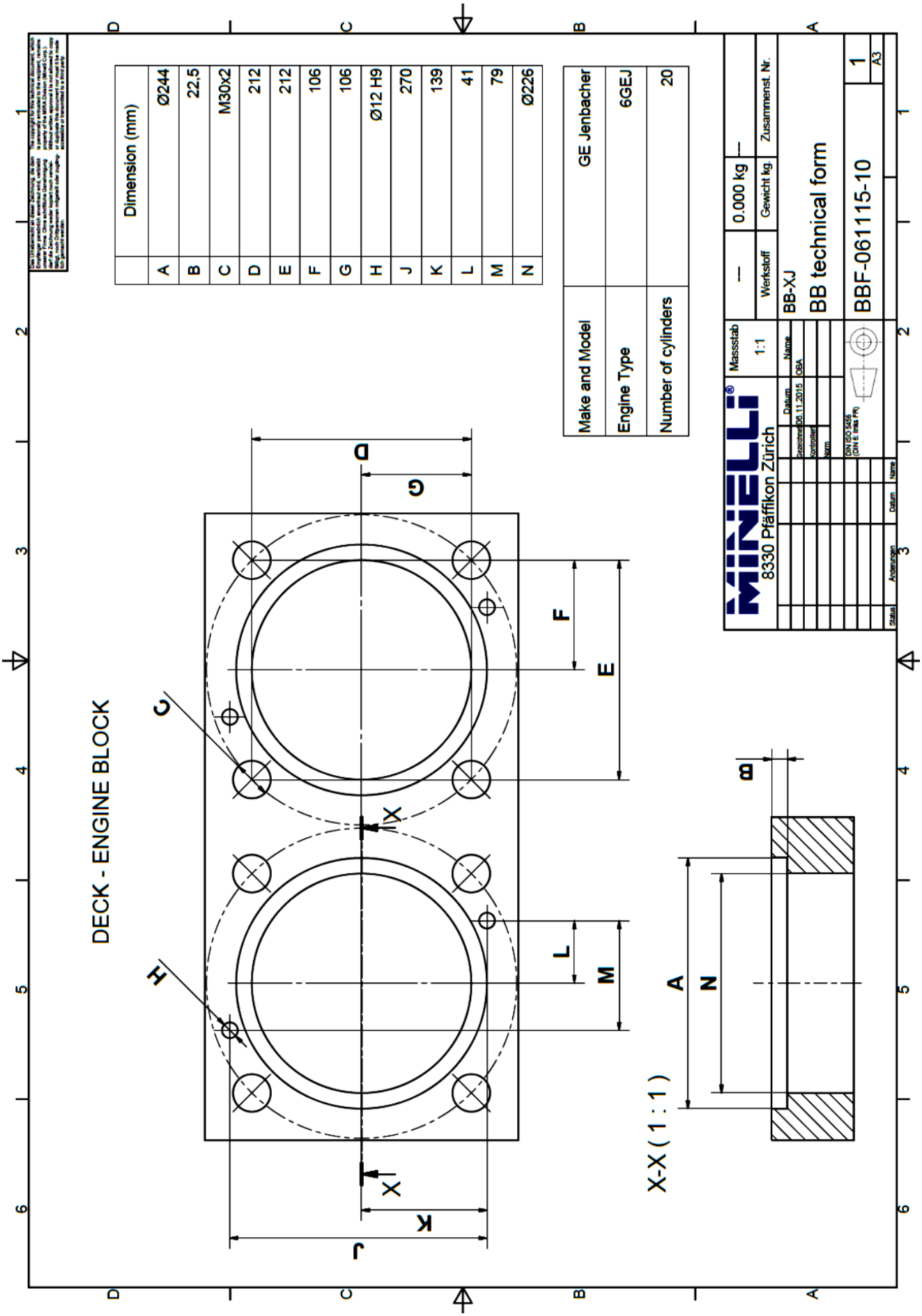

5 Operating (refacing of counterbore seats)

The preconditions for flawless processing and precise results are:

- Clean turning tools, fitted with flawless cutting edges (no wearing tips)!
- A properly functioning BB-XJ and a fully cleaned bottom side!
- An absolutely clean and flat (evenness) clamping surface, free of any possible dirt residues!
- Ascertain necessary initial tension parameter in accordance with work regulations!

1. Place the BB-XJ on its side. Press down the clamp and insert the turning tool as illustrated.

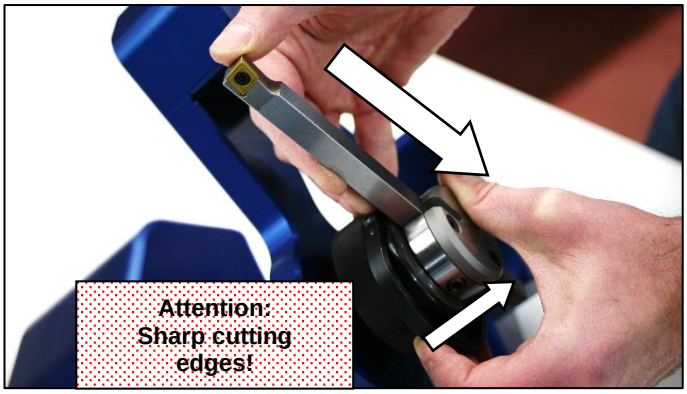

2. Insert the turning tool all the way to the middle and release the clamp. The turning tool should click firmly into place!

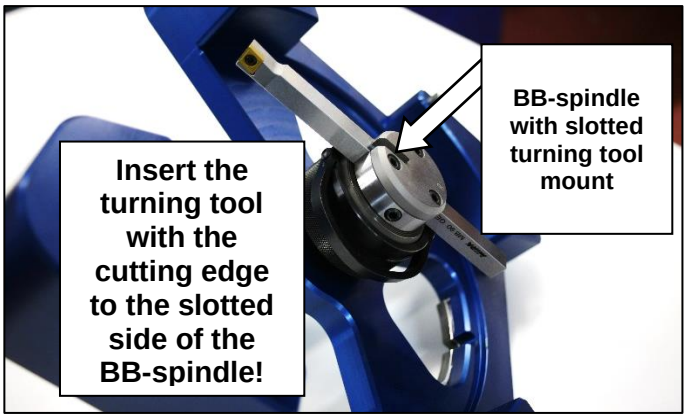

3. Turn the BB-XJ and place it on the counterbore as illustrated. Careful positioning on the locating pins of the crankcase (engine)! Pay close attention to the BB-XJ orientation as pictured beneath! Then, use suitable thickness gauges for a precise height adjustment between the four support points (support bushings) of the BB-XJ to the counterbore seat of the crank case.

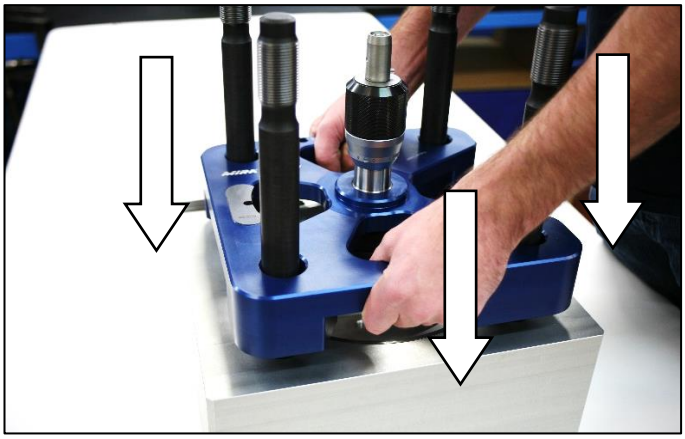

4. Insert the BB-XJ into the two locating pins and fully move it down to the contact surface. Place the washers, locking sleeves and screw nuts on the unit.

5. Tighten the screw nuts using the SW46 wrench. Do not apply extensive torque!

6. Place the crank handle with extension adapter on the spindle adapter. Fasten the setscrew on the side of the extension!

7. Press the clamp down and position the turning tool with the cutting edge over the middle of the counterbore diameter. If the turning tool is set too low, release the locking screw and twist the feed nut upwards anticlockwise.

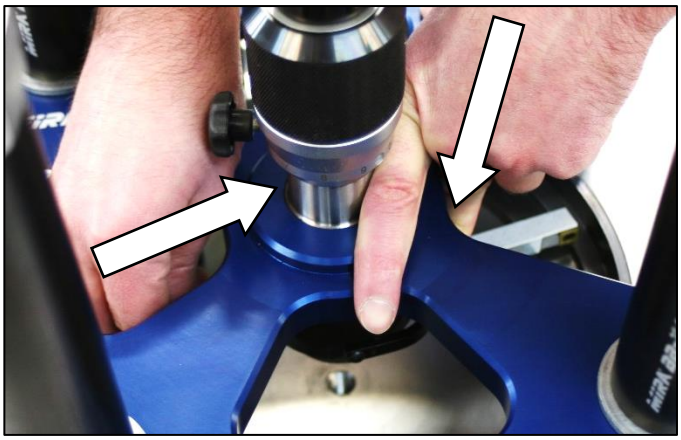

8. If not yet done, release the blocking screw. Turn the crank handle clockwise and slowly move the feed nut off and on in the same direction. Stop when the turning tool is slightly touching the counterbore seat (spotting). Gently tighten the locking screw.

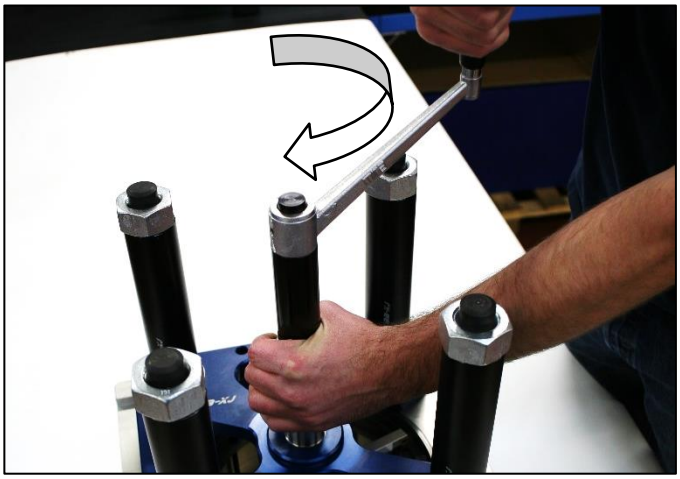

9. Press the clamp down and position the turning tool just before the counterbore seat. Release the clamp.

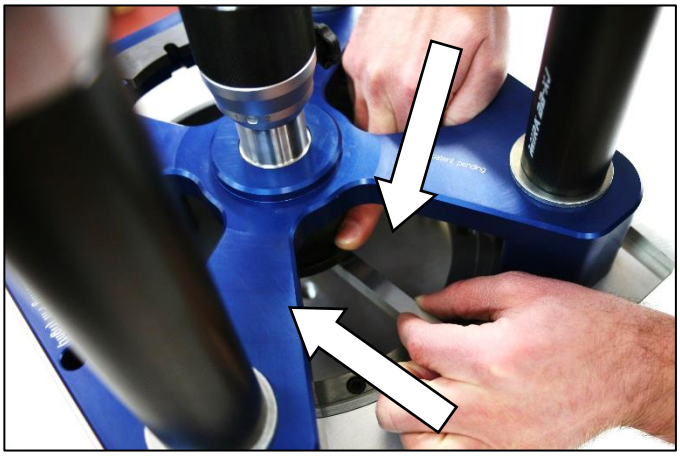

10. Release the locking screw. Set the desired seat depth using the feed nut. Gently tighten the locking screw once again. **Do not feed more than 0,1mm in a single step!**

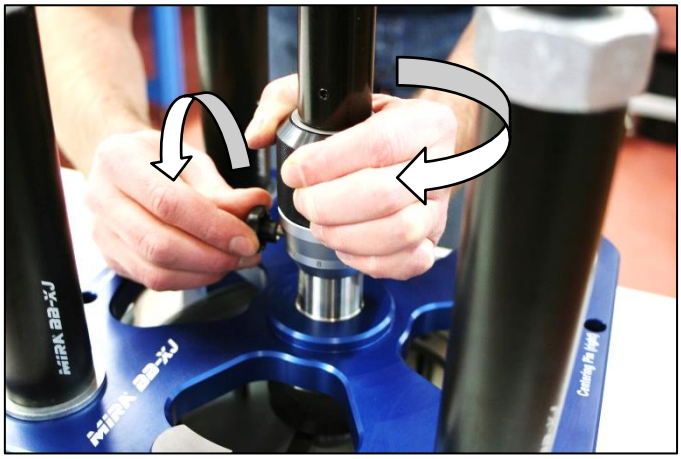

11. Hold the gear sleeve on the knurled surface with your thumb and index finger. Turn the crank handle evenly clockwise. Once the turning tool has reached the wall of the counterbore, slow down the rotation slightly and allow the gear sleeve to gently make contact with your fingers. As soon as the cutting edge is reaching the sidewall of the counterbore, the cutting pressure and therefore the rotational resistance will increase. **Do <u>not</u> turn the crank handle anticlockwise in this step!**

12. Check the deployment of the BB-XJ using a depth gauge bolt. Reference height (gauge slide) to contact surface => 60,000mm. The measurement is made to check the depth of the counterbore after refacing the seat.

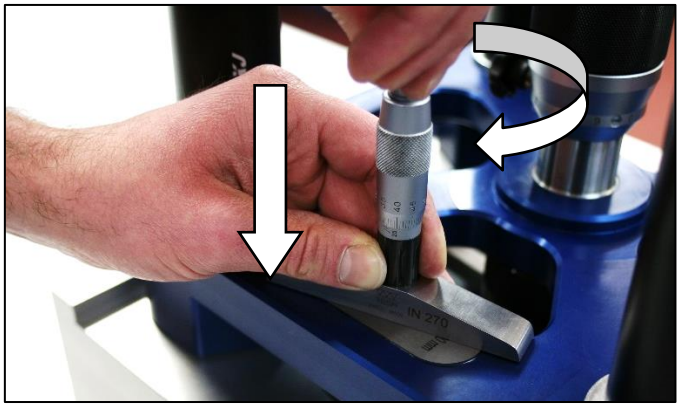

13. If final depth has not been achieved yet, repeat steps 9-12. If the final depth has been achieved, press the clamp down and carefully slide back the turning tool up to the front of the counterbore seat.
For further refacing of outstanding counterbore seats:
Repeat steps 3-13

6 Maintenance and spare parts

6.1 Lubrication of the main spindle and the advancing mechanism

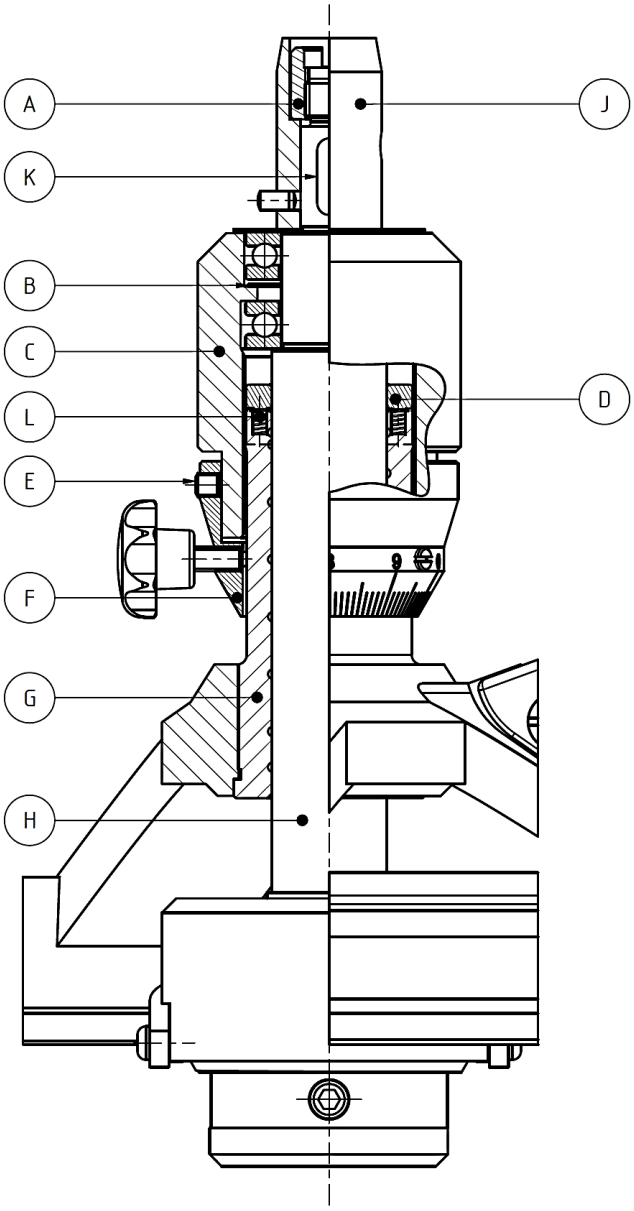

Annual service:

1. Remove the vernier (F) from the advancing mechanism (loosen worm screw (E)), but leave it on the spindle guide (G).
2. Loosen special nut (A) and remove adapter or crank handle (J). After removing the key (K), the main spindle (H) can be pulled down completely.
3. Slowly screw the advancing mechanism upward (C). Be careful that none of the parts from the spring-loaded threaded ring (D) get lost.
4. Clean all parts and lubricate them.
5. When screwing on the advancing mechanism (C), be sure the threaded ring (D) is being fixed again in the same position. When reaching the guide (G) with the threaded ring (D), press down the advancing mechanism (C) in order to reduce the play of the springs (L) to zero.
6. When placing the main spindle (H), be sure the compensating spring (B) is properly fixed.

6.2 Spare parts drawing BB-XJ

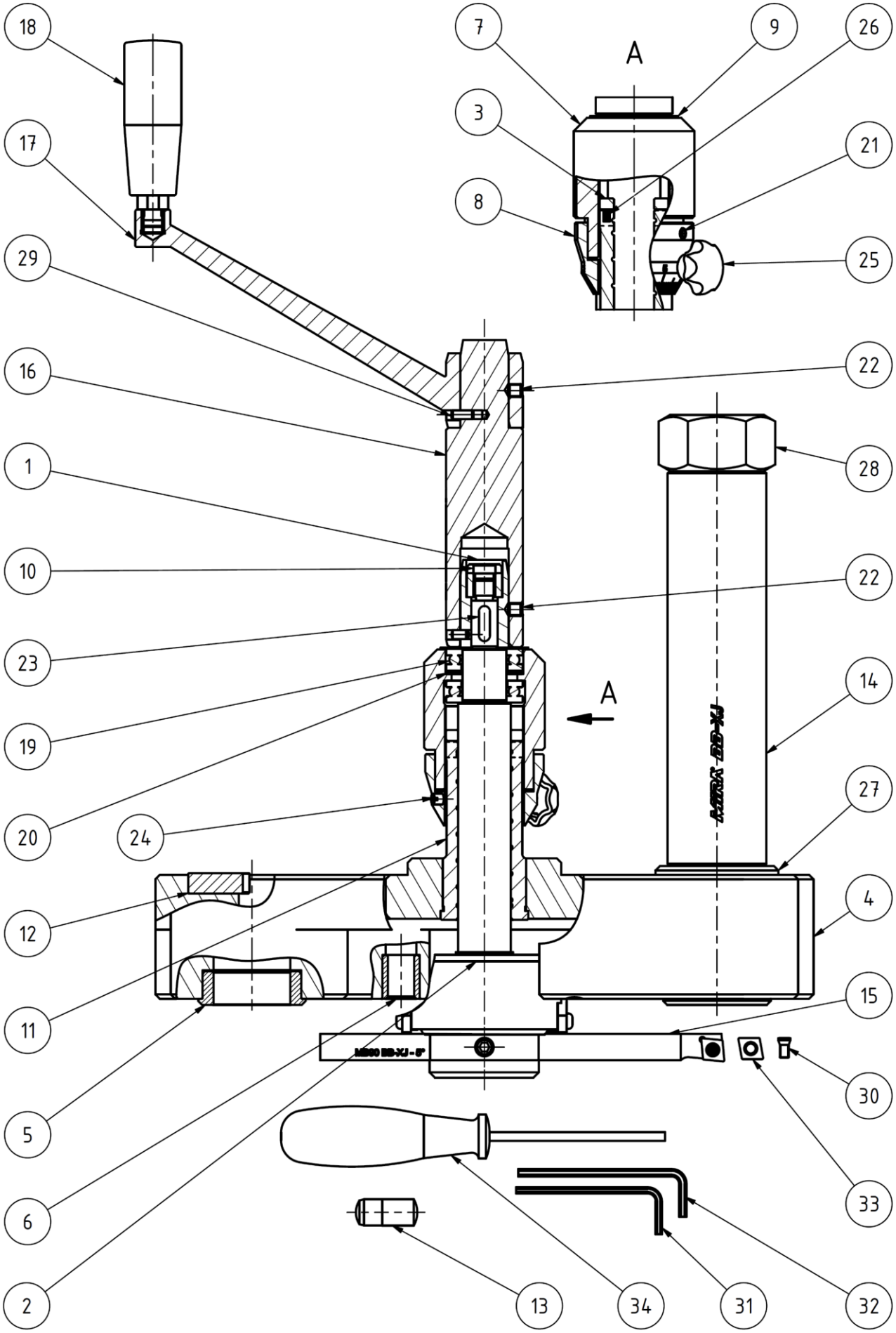

6.3 Spare part list to spare parts drawing BB-XJ

When ordering spare parts, the indication of the serial- and the manufacturing number is always essentially.

Spare parts valid with serial-No.: 0220 from manufacturing-No: 0106 < …

Description	Pos.	Quantity	Part-No.:
Adapter	1	1	18042.4.2474
Main spindle assembly	2	1	18042.3.2390
Threaded ring	3	1	18042.4.2322
Main body	4	1	101150.1.5877
Support bushings	5	4	101150.1.6644
Guide sleeves	6	2	101150.1.7195
Advancing device metric	7	1	18042.4.2323
Vernier	8	1	18042.4.2324
Cover disk	9	1	18042.4.2325
Special-nut	10	1	18042.4.2473
Guide	11	1	18051.3.2321
Gauge slide	12	1	18051.4.1292
Locating/centering pins Ø12x28	13	2	101150.3.5875
Locking sleeves	14	4	101150.1.5878
MB90 BB-XJ - 5° turning tool	15	1	101150.2.5883
Extension adapter	16	1	101150.1.5880
Crank handle body	17	1	10151.3.2456
Handle grip M10	18	1	10141.4.1242
Grooved axial ball bearing	19	2	1LAR20
Compensating spring	20	1	1MAS24.5
Setscrew	21	1	1N0024M05x004
Setscrew	22	2	1N0024M06x006
Key	23	1	1N087005x05x16
Set screw slotted, Polyamide	24	2	1N1073M05x006
Locking screw	25	1	1NH6336M5KU
Compression spring	26	6	1MDF03
Washer	27	4	1N0721M30
Screw nuts M30x2	28	4	1N0137M30x02
Dowel pin h6	29	1	1N085804x010
Torx screw	30	1	1MTS04.0
Allen key 2.5	31	1	1WIS2.5
Allen key 3.0	32	1	1WIS3.0
Cutting insert (cast) AP5210	33	1	1KWP00105
Torx wrench T15	34	1	1KSZ00423
Peli Air Case with foam inlay	100	1	101150.2.7102

6.4 Spare parts drawing BB-spindle

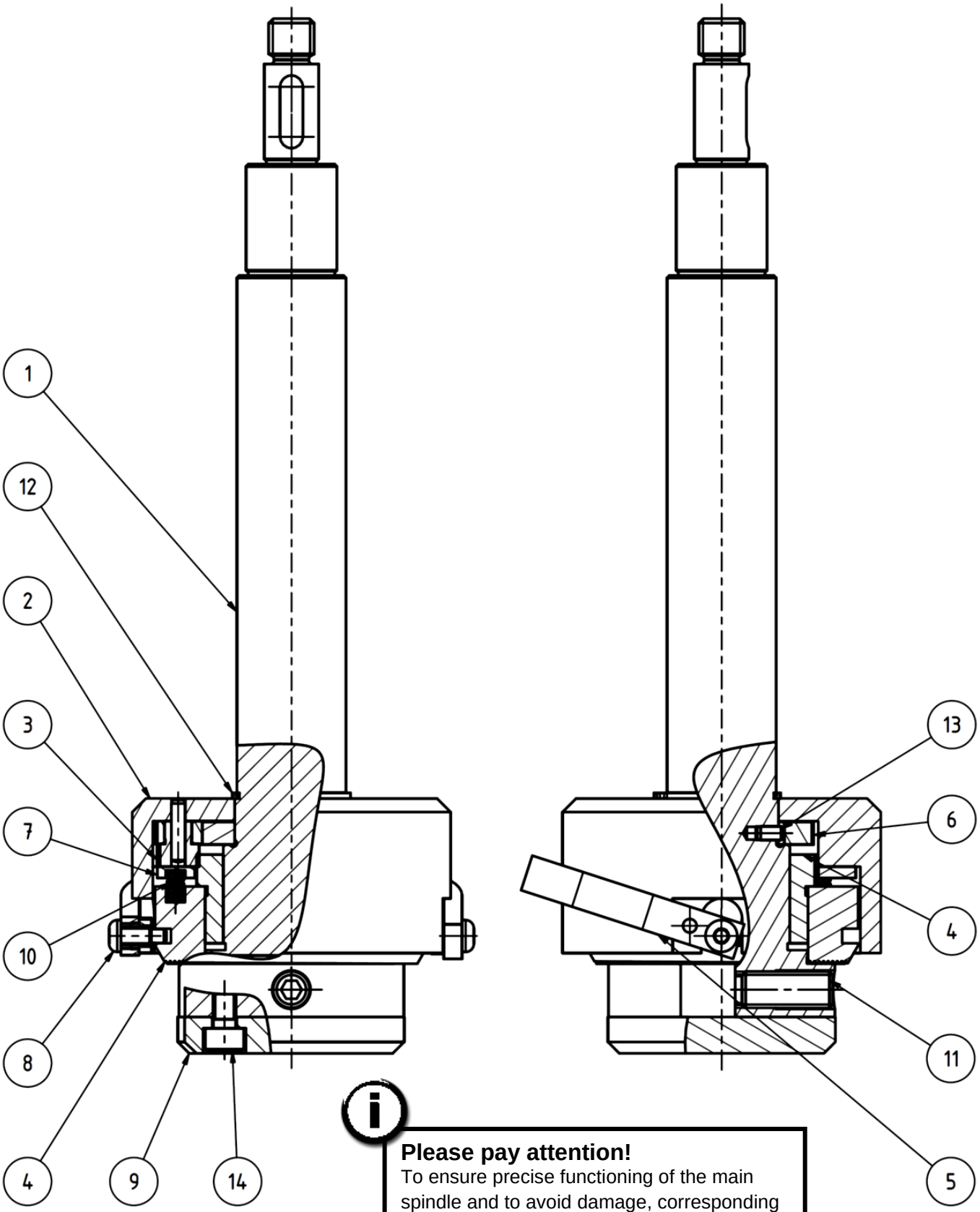

Please pay attention!
To ensure precise functioning of the main spindle and to avoid damage, corresponding replacement work should only be carried out by an authorised MIRA specialist dealer or by the manufacturer.

6.5 Spare part list to spare parts drawing BB-spindle

When ordering spare parts, the indication of the serial- and the manufacturing number is always essentially.

Spare parts valid with serial-No.: 0220 from manufacturing-No: 0106 < …

Description	Pos.	Quantity	Part-No.:
Main spindle	1	1	18051.3.2351
Gear bushing	2	1	18041.4.2352
Toothed wheel assembly	3	2	18041.4.1361
Advancing device assembly	4	1	18041.4.2357
Lifting bow (clamp)	5	1	18041.4.2354
Driving gear wheel	6	1	18041.4.1087
Gliding ring	7	1	18041.4.2353
Lifting bow screw	8	2	18041.4.2358
Cover plate	9	1	18041.4.1148
Compression spring	10	6	1MDF18
Pressure bolt	11	1	1MDB08/20
Retaining ring	12	1	1N0818A24
Dowel pin h6	13	3	1N085803x006
Allen screw	14	3	1N0272M05x008

Notes

Notes

Manufacturer and worldwide distributor:

MINELLI CORPORATION
Mattenstrasse 3
8330 Pfäffikon ZH
Switzerland

www.miratool.ch

Your local distributor: